GRANBERG

2025-08-17

Draft specification

BASELIFT CORNER 6312LA
Manufacturer: Granberg

Article Info

104.5 x 104.5 cm
45° front edge, 45° wall

Art.no	Description	EAN
6312LA-1045	BASELIFT CORNER 6312LA	7340193103557

Specifications

Installation
Floor-mounted

Front height
40 mm

Corner solution
45° front edge, 45° wall

Height adjustment
Motorised, steplessly adjustable 300 mm (700-1000 mm excl. top board)

Speed level
30 mm/sec.

Operation
Recessed mounted button or radio control

Safety
The safety strip is placed under the front edge of the worktop.
If anything touches the safety strip, the lifting unit stops

Electrical connection
Plug for 230 V, 2 x 5A

Plumbing connections
Connection is made with flexible hoses

Lifting force
100 kg

IP-class
IP 20

Frame depth
560-590 mm from wall

Dimensions cover plates
2 pcs, height 438 mm, thickness 12-20 mm

Width worktop
Width = width of the lift

Depth worktop
565-630 mm (15 mm shallower than worktops on fixed cabinets)

Space to wall / adjoining cabinet
5 mm

Space to wall (for tiles)
15 mm

Tiling
From 700 mm above floor (alternatively all the way down to the floor)

Delivery modules
Ready-mounted worktop incl. safety switch, motors

Fittings supplied
Bracket for fronts and top board

Material
Aluminium frame
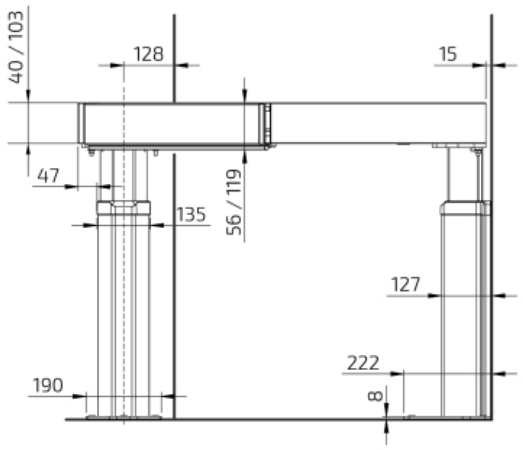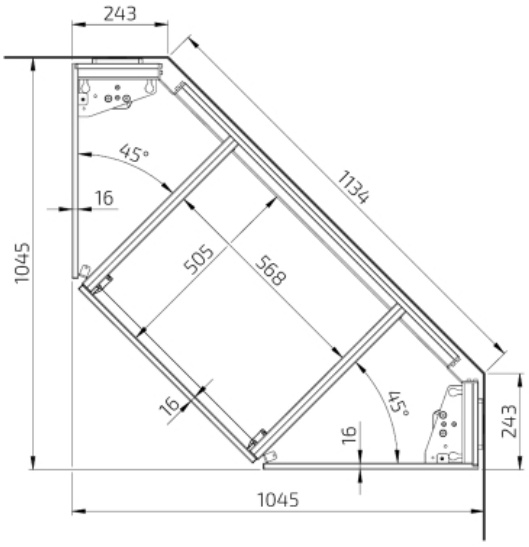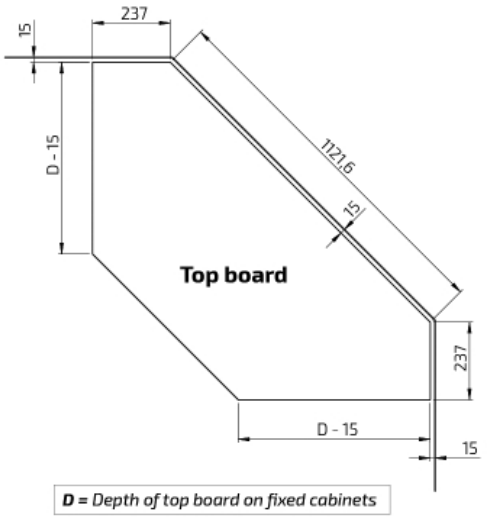
Warranty
2 years Warranty
This product is covered by a 2-year warranty against manufacturing defects.